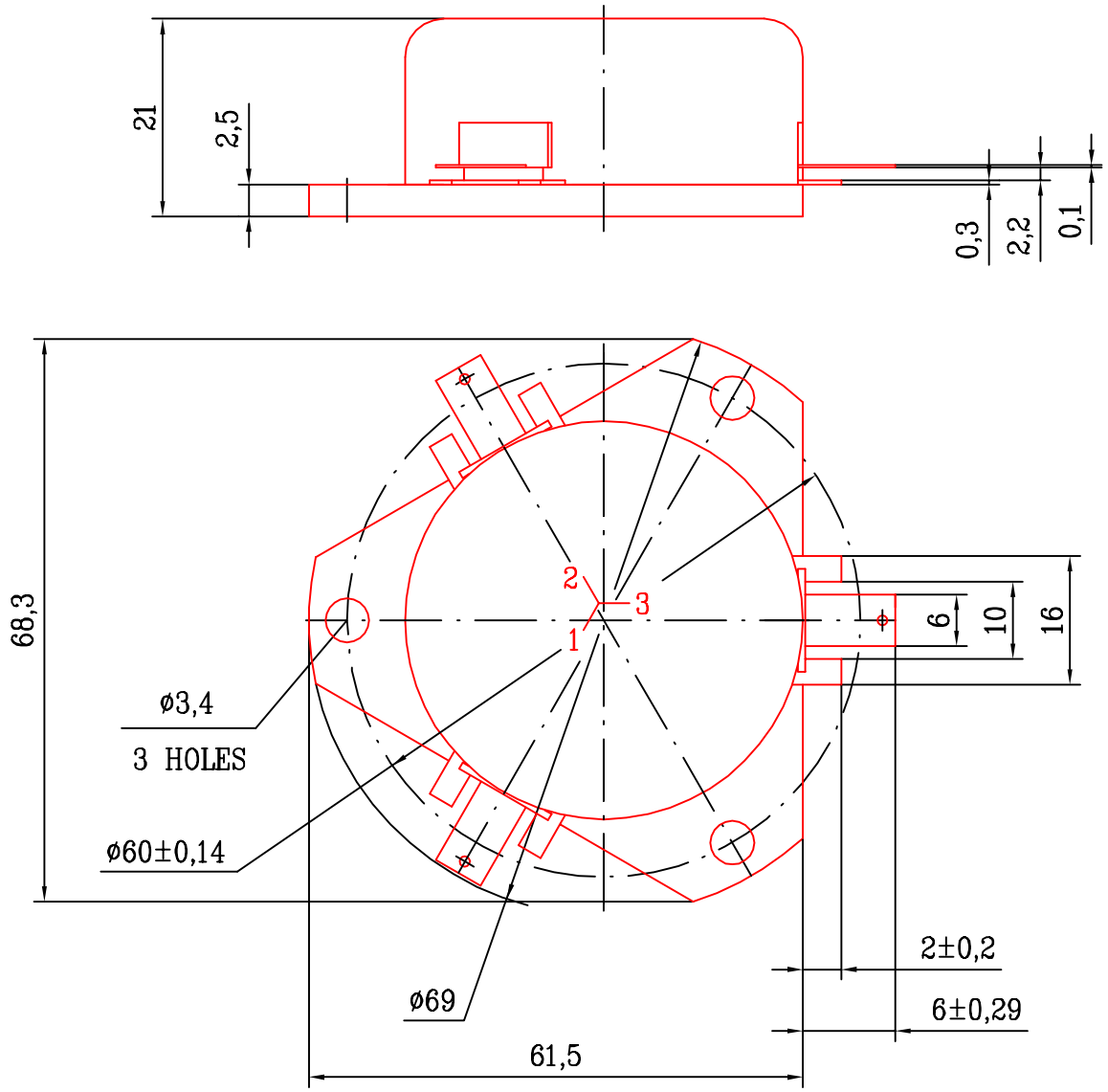

UNLESS OTHERWISE SPECIFIED DIMENSIONS ARE IN MM TOLERANCES ON	APPROVALS		DATE
DECIMALS .X± .1 .XX± – .XXX± – ANGLES –	DRAWN	SEROVA	22.09.22
	CHECKED	GOROBETS	22.09.22
	ISSUED		
MATERIAL			
SURFACE COATING –	SIZE A3	SCALE 2.5:1	
	SHEET –	OF 1	

D&M Co "Ferrit-Quasar"
196084, Russia, St. Petersburg, Tsvetochnaya St. 6
Phone/fax : 7 812 3887915/7 812 3883145
E-mail : info@ferrite-quasar.ru
WWW : www.ferrite-quasar.ru

1HDS78–1

OUTLINE DRAWING

N° DWG FQ–D–0002